VARIABLE FOOTPRINT OPTION SERIES MINI SPIDER CRANES

URW-376 · URW-506 · URW-547 · URW-706 · URW-706-2 · URW-1006+

UNIC CRANES EUROPE

The all new, innovative, variable footprint option is now available on a range of UNIC mini spider cranes including the UNIC URW-376, URW-506, URW-547, URW-706, URW-706-2 and URW-1006. The introduction of variable outriggers enables these cranes to be used in over 50 different outrigger combinations, whilst maintaining the optimum lifting capacity within any given zone. The adjustable footprint also increases the flexibility and usability of these mini cranes, enabling them to operate in some of the most confined areas like never before.

The fully automatic system constantly monitors the extension of each outrigger before calculating the cranes maximum capacity between two adjacent outriggers, the zone capacity is restricted by the lesser extended outrigger. The new 7" screen outrigger display, clearly displays each outrigger extension, zone safe working loads and provides the operator with visual and audible warnings to ensure optimum safety should the operator slew into a zone outside of the cranes working footprint.

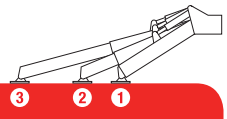

URW-376-3 OUTRIGGERS

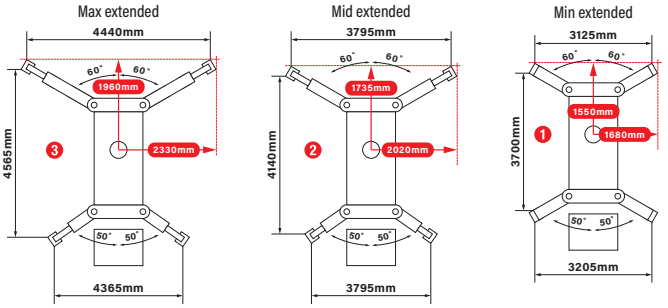

URW-376-3 VARIABLE FOOTPRINT DIMENSIONS EXAMPLE

2 max outriggers, 1 mid, 1 min

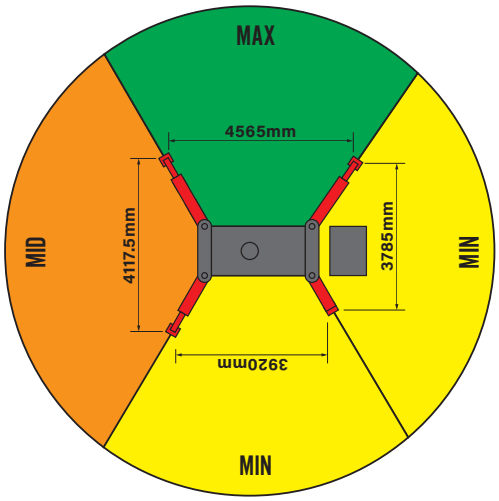

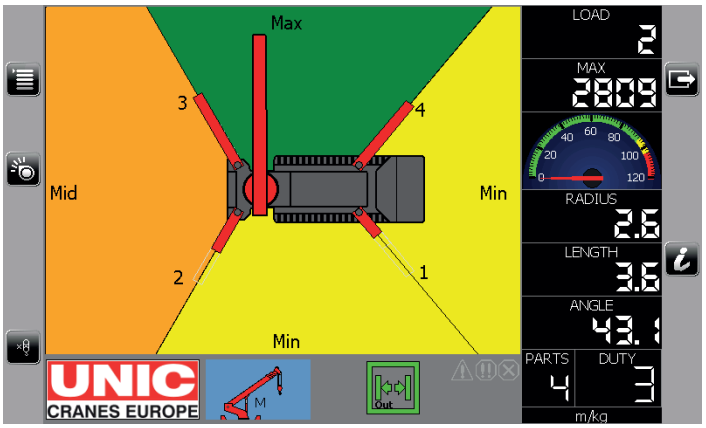

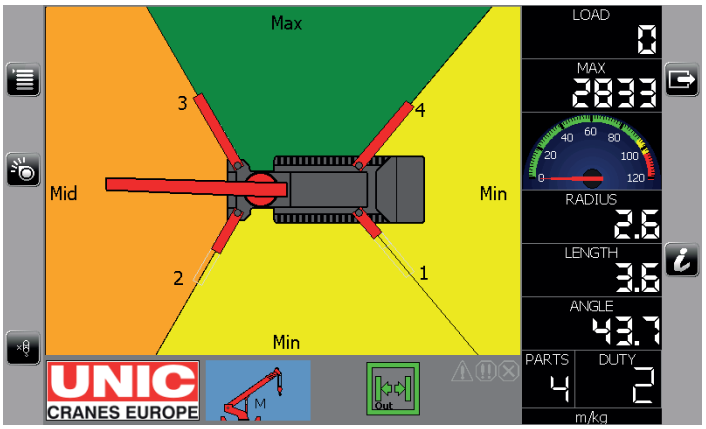

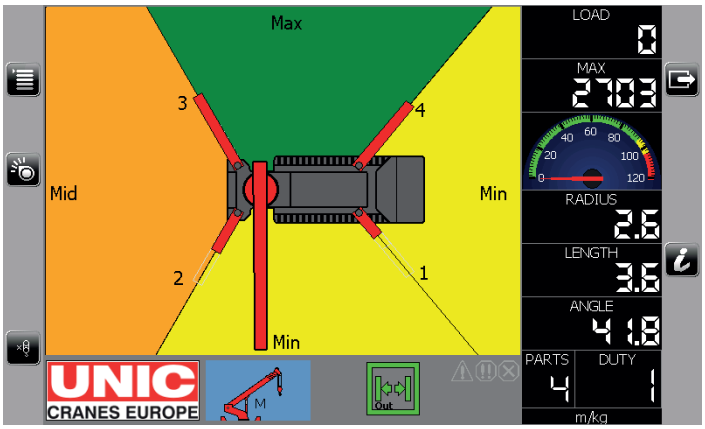

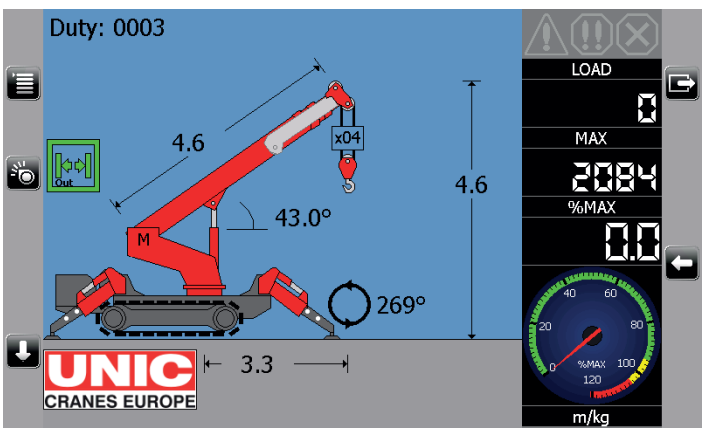

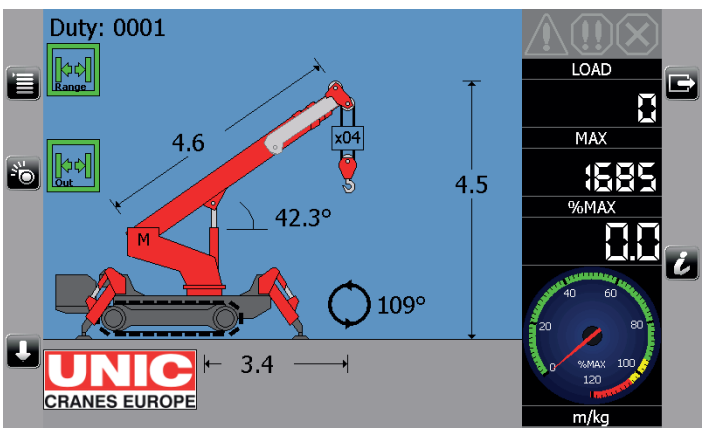

VARIABLE FOOTPRINT OPTION SERIES MINI SPIDER CRANES

URW-376 · URW-506 · URW-547 · URW-706 · URW-706-2 · URW-1006+

SLEW & HEIGHT LIMITATIONS

The Variable Footprint series of UNIC spider cranes are also fitted with a full range / slew limitation system, allowing these mini machines to be used in some of the most tight and compact working areas.

The range limiting options include standard height limitation if working under a flat structure or floor, variable height limit for working in a multilevel structure, slew limitation while working around one fixed obstruction (standard use on railways and highway projects) and variable slew limitation for use when there are multiple obstructions within the cranes working area.

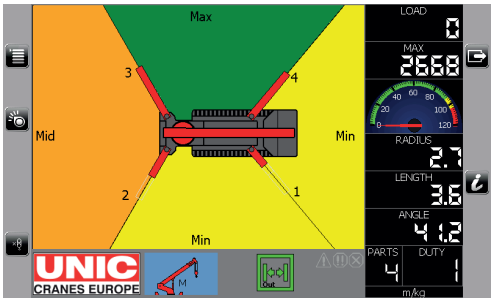

SLEW & HEIGHT LIMITATION AS STANDARD

Height Limitation

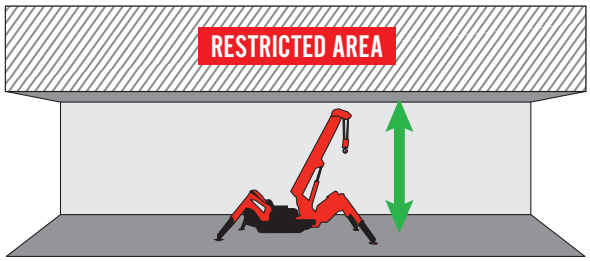

Variable Height Limitation

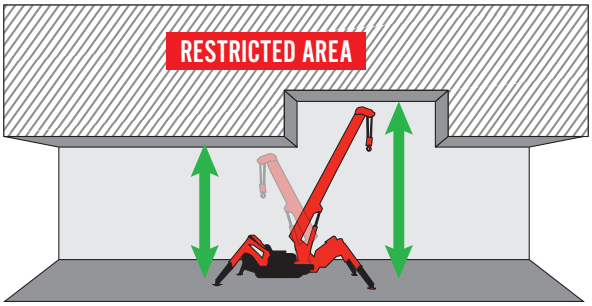

Slew Limitation

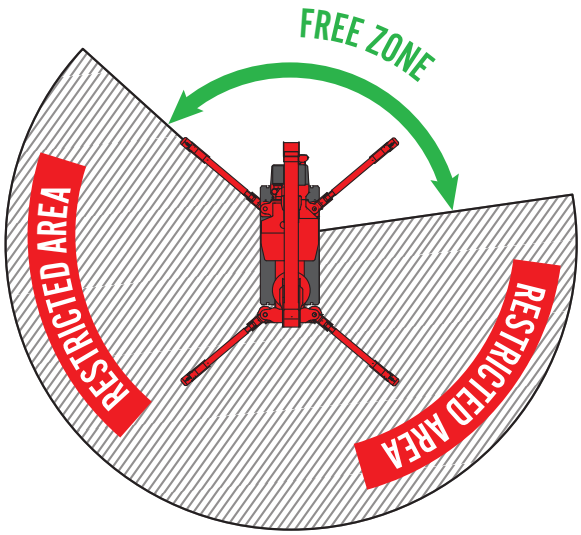

Variable Slew Limitation

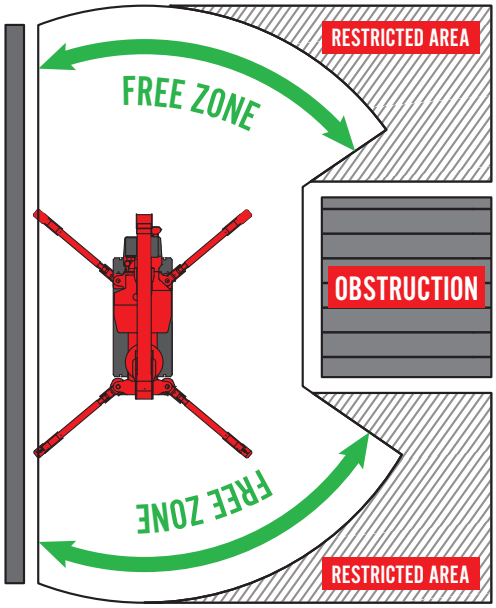

HEAD OFFICE: GGR UNIC House, Pegasus Way, Haddenham Business Park, Haddenham, Buckinghamshire, HP17 8LJ
Telephone: +44 (0)1844 202071 **Fax:** +44 (0)1844 202075

UK NORTHERN DEPOT: Presentation House, Broadgate, Broadway Business Park, Oldham, OL9 0JA
Telephone: +44 (0)161 683 2580 **Fax:** +44 (0)161 683 4444

Email: sales@uniccranes.com **Web:** www.uniccranes.com

UNIC Cranes Europe is part of the GGR Group of Companies

© Copyright GGR Group 2019